GPRV-1 GAS PRESSURE REGULATOR

MAXITROL®

325 Series Line Pressure Regulators

C US

For 2 PSI Piping Systems

TABLE OF CONTENTS

Description 1
Specifications 1, 2
Pressure Drop 2
Capacities 3
Dimensions 3
Spring Range Selection 4
Sizing Instructions 4

DESCRIPTION

325 Series pounds to inches regulators are for use on residential, commercial, and industrial applications.

The 325 Series features a high leverage valve linkage assembly to deliver positive dead-end lock-up. The regulators are capable of precise regulating control from full flow down to pilot flow.

B Models: Imblue Technology™ increases corrosion resistance and provides extra protection against the elements for regulators used in outdoor applications.

NOTE: (B) in model number designates Imblue Technology™.

NOTICE

These regulators provide no downstream over-pressure protection in the event of failure. At supply pressures in excess of 2 psi, they should not be used. For Technical Support contact a Maxitrol Technical Support Representative. See Maxitrol Safety Warning Instructions, GPR_CSA_2PSI_MI_EN.FR

SPECIFICATIONS

Gases
Suitable for natural, manufactured, mixed gases, liquefied petroleum gases, and LP gas-air mixtures.

Approvals
CSA: ANSI Z21.80/CAN 6.22

Maximum Inlet Pressure

Model	CSA Certified
325-3(B)L	2 psi (13.8 kPa)
325-5(B)L	
325-7A(B)L	

Minimum Inlet Pressure
CSA Certified.....1 psi (6.9 kPa)

Outlet Pressure Range
Certified Spring ..... 7 - 11" w.c.

Emergency Exposure Limits
All Models (Inlet Side Only) ..... 65 psi (450 kPa)

Figure 1: 325 Series Line Pressure Regulators

Maximum Individual Load
Largest single appliance served by the regulator.
325-3(B)L .....140,000 Btu/hr
325-5(B)L ..... 425,000 Btu/hr
325-7A(B)L .....1,250,000 Btu/hr

Capacity
Total load of multiple appliances combined.
325-3(B)L (3/8", 1/2") ..... 250,000 Btu/hr
325-5(B)L (1/2") ..... 500,000 Btu/hr
325-5(B)L (3/4", 1") ..... 600,000 Btu/hr
325-7A(B)L (1 1/4", 1 1/2") .....1,250,000 Btu/hr

NOTE: Capacity table is used to determine the maximum multiple appliance load. The largest single appliance served by the regulator should not exceed the maximum individual load specified above.

Ambient Temperature Limits
All Models ..... -40ºF to 205ºF (-40ºC to 96ºC)

Vent Pipe Connections
325-3(B)L ..... 1/8" NPT
325-5(B)L ..... 3/8" NPT
325-7A(B)L ..... 1/2" NPT

Mounting Position
The 325 Series is suitable for multi-poise mounting, but when used with a vent limiting device, the regulator must be mounted in a horizontal upright position (see Figure 2). Install the regulator properly with gas flowing as indicated by the arrow on the casting. (See Maxitrol Safety Warning Instructions, GPR_CSA_2PSI_MI_EN.FR).

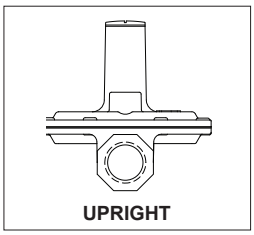

Figure 2: 325 Regulator in Upright Postion

© 2013 Maxitrol Company, All Rights Reserved.

vLimiter® Vent Limiting Devices

12A09 (1/8" NPT) 12A39 (3/8" NPT) 12A49 (1/2" NPT)

vProtector® Vent Protectors

13A15 (1/8" NPT) 13A15-5 (3/8" NPT) 13A25 (1/2" NPT)

Figure 3: Vent Accessories

vLimiter® Vent Limiting Devices for Indoor Applications

325-3(B)L 12A09
325-5(B)L 12A39
325-7A(B)L 12A49

NOTICE

Maxitrol vent limiting devices eliminate the need to run vent piping to the outside. Vent limiting devices are designed for use indoors and in spaces where limiting the amount of gas escapement due to diaphragm failure is critical. **Vent limiting devices should not be used outdoors if they are exposed to the environment.** Vent protectors are available for all outdoor applications to ensure proper vent protection.

vProtector® Vent Protectors for Outdoor Applications

325-3(B)L 13A15
325-5(B)L 13A15-5
325-7A(B)L 13A25

PRESSURE DROP: 0.64 sp gr gas expressed in CFH (m^3/h)

Model Number	Pressure Drop		
	7.0" w.c. (1.7 kPa)	1/2 psi (3.4 kPa)	3/4 psi (5 kPa)
325-3(B)L	145 (4.0)	204 (5.8)	250 (7.0)
325-5(B)L	400 (11.3)	550 (15.6)	670 (19.0)
325-7A(B)L	815 (23.1)	1149 (32.5)	1405 (39.8)

NOTE: All Maxitrol line pressure regulators must be installed and operated in accordance with Maxitrol's Safety Warning Instructions.

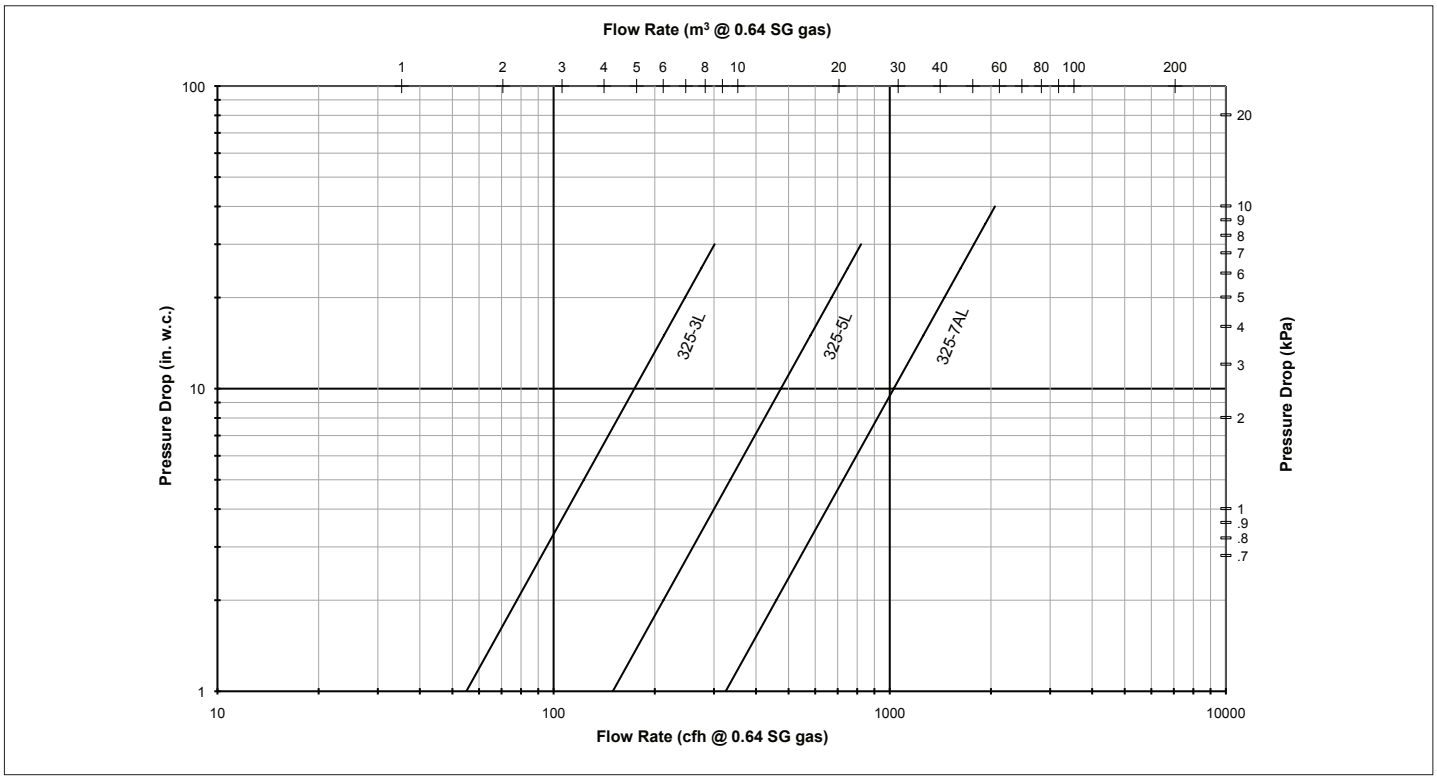

Figure 4: Pressure Drop Chart

© 2013 Maxitrol Company, All Rights Reserved.

CAPACITIES

Capacities expressed in CFH (m^3/h) @ 0.64 sp gr gas

Model	Pipe Size	Outlet Pressure Set Point	Operating Inlet Pressure				
			1/2 psi (3.4 kPa)	3/4 psi (5.2 kPa)	1 psi (6.9 kPa)	1 1/2 psi (10.3 kPa)	2 psi (13.8 kPa)
325-3(B)L	3/8” x 3/8” 1/2” x 1/2”	7.0” w.c. (1.7 kPa)	145 (4.1)	200 (5.7)	250 (7.1)	250 (7.1)	250 (7.1)
		10.0” w.c. (2.5 kPa)	110 (3.1)	180 (5.1)	230 (6.5)	250 (7.1)	250 (7.1)
325-5(B)L	1/2” x 1/2”	7.0” w.c. (1.7 kPa)	360 (10.2)	485 (13.7)	500 (14.2)	500 (14.2)	500 (14.2)
		10.0” w.c. (2.5 kPa)	275 (7.8)	475 (13.5)	500 (14.2)	500 (14.2)	500 (14.2)
325-5(B)L	3/4” x 3/4” 1” x 1”	7.0” w.c. (1.7 kPa)	370 (10.5)	520 (14.7)	600 (17.0)	600 (17.0)	600 (17.0)
		10.0” w.c. (2.5 kPa)	275 (7.8)	450 (12.7)	570 (16.1)	600 (17.1)	600 (17.0)
325-7A(B)L	1 1/4” x 1 1/4” 1 1/2” x 1 1/2”	7.0” w.c. (1.7 kPa)	750 (21.2)	1000 (28.3)	1250 (35.4)	1250 (35.4)	1250 (35.4)
		10.0” w.c. (2.5 kPa)	525 (14.9)	900 (25.5)	1125 (31.9)	1250 (35.4)	1250 (35.4)

DIMENSIONS

Model Number	Pipe Size*	Vent Connection	Swing Radius	Dimensions		
				A	B	C
325-3(B)L	3/8”, 1/2”	1/8” NPT	3” (76 mm)	3.5” (89 mm)	4.2” (108 mm)	3.9” (98 mm)
325-5(B)L	1/2”, 3/4”, 1”	3/8” NPT	4.9” (124 mm)	5.3” (133 mm)	5.9” (149 mm)	5.4” (138 mm)
325-7A(B)L	1 1/4”, 1 1/2”	1/2” NPT	6.1” (156 mm)	7.3” (184 mm)	8” (203 mm)	7” (178 mm)

* Standard models NPT threads

NOTE: Dimensions are to be used only as an aid in designing clearance for the regulator. Actual production dimensions may vary somewhat from those shown.

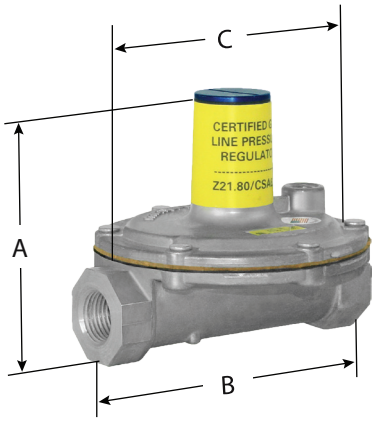

325-3(B)L

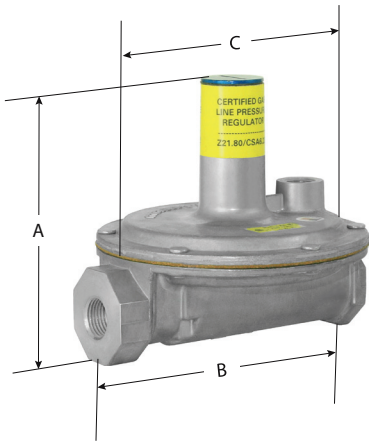

325-5(B)L

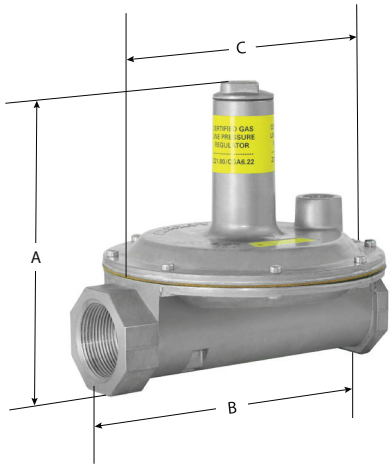

325-7A(B)L

© 2013 Maxitrol Company, All Rights Reserved.

SPRING RANGE SELECTION

Outlet Pressure Range (all models):
Certified Spring ..... 7 - 11” w.c.

SIZING INSTRUCTIONS

When 325 Series regulators are used on 2 psi piping systems, often times the 2 psi systems are sized with a 1 psi pressure drop through the copper or stainless steel tubing. This means there will be 2 psi at the inlet of the regulator under no flow conditions, and 1 psi at the regulator inlet under maximum flow conditions.

TO SELECT A LINE PRESSURE REGULATOR OF SUFFICIENT FLOW - ONE MUST KNOW:

1. Available inlet pressure (maximum static/minimum operating).

2. Desired outlet pressure.

3. Required maximum capacity (total load, all appliances combined) and maximum individual load.

4. Pipe size.

Example: To select a 325 series regulator of sufficient capacity to handle flow...

KNOWN:

A. Required: 1/2” NPT line regulator, outlet pressure of 7” w.c., with static pressure of 2 psi, and a minimum operating inlet pressure of 1 psi.

B. Combined BTU rating of all appliances to be served by the regulator: 145,000 Btu/hr.

C. Largest single appliance’s BTU rating: 90,000 Btu/hr

SOLUTION:

A. In the Capacities Table (page 3), locate rows where 1/2” (pipe size) models with 7” w.c. outlet pressure intersect with 1 psi operating inlet pressure column. (325-3L = 250 CFH, 325-5AL = 425 CFH).

B. The total BTU load requirement cannot exceed the requirement, and does not exceed either model’s capacity.

C. The 90,000 Btu/hr single largest appliance rating is below the 325-3L maximum individual load capacity of 140,000 Btu/hr.

D. The 325-3L is the correct line regulator for this application.

Maxitrol Company
23555 Telegraph Rd., P.O. Box 2230
Southfield, MI 48037-2230 U.S.A.
LPR_MS_EN_11.2013

www.maxitrol.com
© 2013 Maxitrol Company,
All Rights Reserved.